ITEM NO. 164160 C

16.0 MM

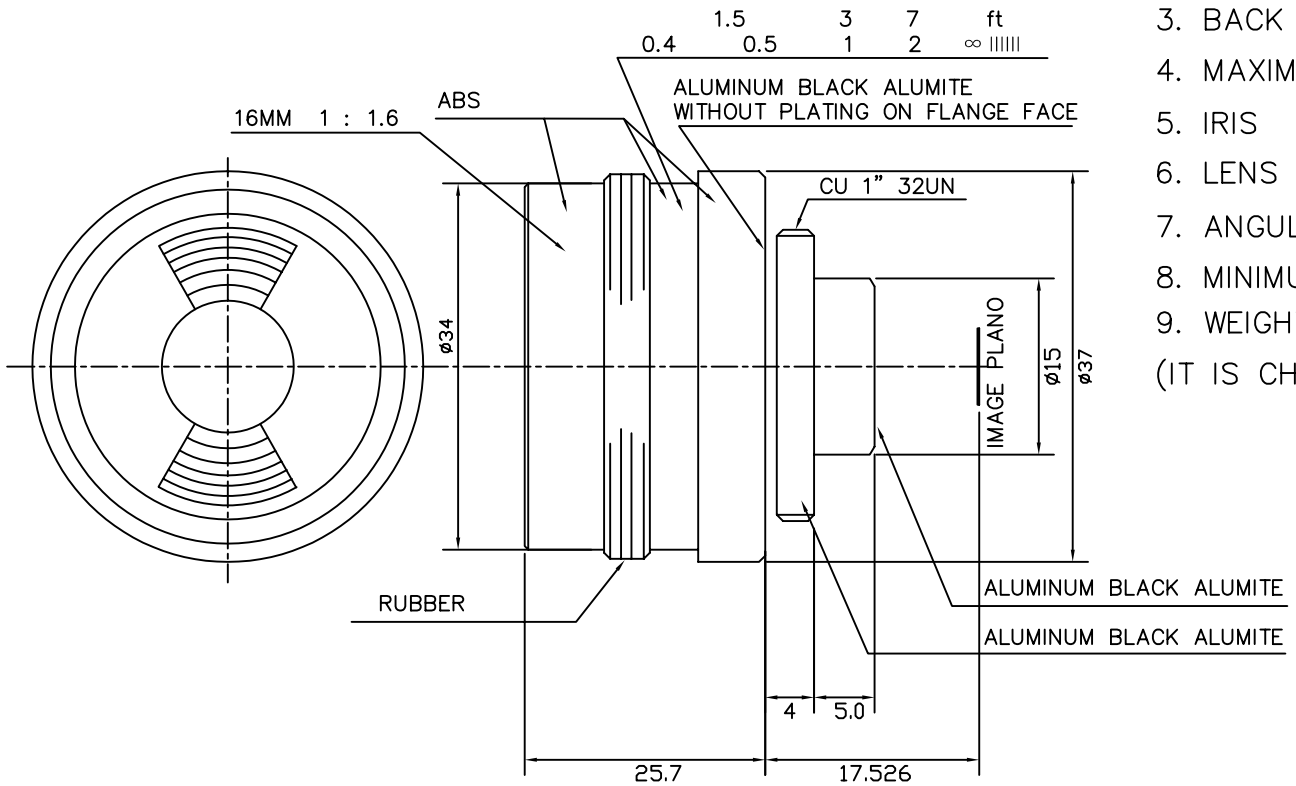

1. SENSING AREA : 2/3", 1/2" & 1/3"
2. FOCAL LENGTH : 16.0MM ± 5%
3. BACK FOCAL LENGTH : 10.43MM ± 5% (IN AIR)
4. MAXIMUM RELATIVE APERTURE : 1.6 ± 5%
5. IRIS : WITHOUT DIAPHRAGM
6. LENS CONSTRUCTION : 4 COMPONENTS 4 ELEMENTS
7. ANGULAR FIELD OF VIEW : DIAGONAL 38°, 28.5° & 19°
8. MINIMUM OBJECT DISTANCE : 40 CM
9. WEIGHT : 27 gr

(IT IS CHANGEABLE ON EXTERNAL DIMENSION BY CUSTOMER'S REQUIREMENT.)

NO.	DESCRIPTION	MATERIAL	SIZE	Q'TY	REMARK

DRAWN		TOLERANCES	
CHECKED		ANGLE 1.2°	TITLE
APPROVED		x. ± 0.2 .x ± 0.1 .xx ± 0.05	f = 16.0MM F NO: 1.6
SCALE	2/1		
HanKwang Opto Corporation.		DRAW NO. 990731	SHEET NO.